Arden

20 120 Lavatory Mini Wideset - WaterCare

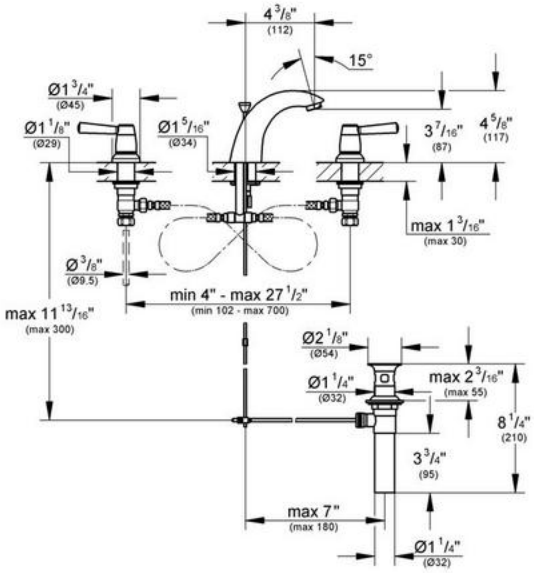

Description

GROHE SilkMove® Ceramic Cartridges
Lever Handles
GROHE WaterCare - 30% Water Savings. WaterSense® Labeled

Flow Rate

1.5 gpm

Code Compliance

ASME/ANSI A112.18.1M
ASSE Standard 1016
ADA Compliant

Finish Options

20 120 OOE Chrome
20 120 ENE Infinity Brushed Nickel

GROHE America, Inc 241 Covington Drive, Bloomingdale, IL 60108 630-582-7711 Fax:630-582-7722
GROHE Canada, Inc 1230 Lakeshore Road East, Mississauga, Ontario Canada L5E 1E9 905.271.2929 Fax:905.271.9494